Hiab Multilift

XR Power range hooklifts

TECHNICAL INFORMATION

XR21S
XR21T
XR26S
XR26T

TECHNICAL DATA

TYPE	XR21S		XR21T		XR26S	XR26T
VEHICLE TYPE	3 axle		3 axle		4 axle	4 axle
GVW OF THE VEHICLE (t)	26		26		32	32
CAPACITY (t)	21		21		26	26
G-LENGTH	51	55	51	55	55	55
SYSTEM WEIGHT (kg) *	2380	2500	2460	2540	2680	2820
TIPPING ANGLE (º)	49		49		49	49
MAX. OPERATING PRESSURE (MPa)	30		30		30	30
RECOMMENDED MAX. OIL FLOW (l/min)	100 (special 150)		100 (special 150)		120 (special 150)	120 (special 150)

XR21S
XR26S

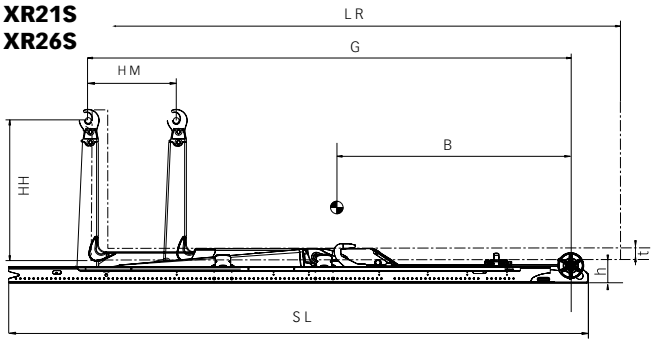

XR21T
XR26T

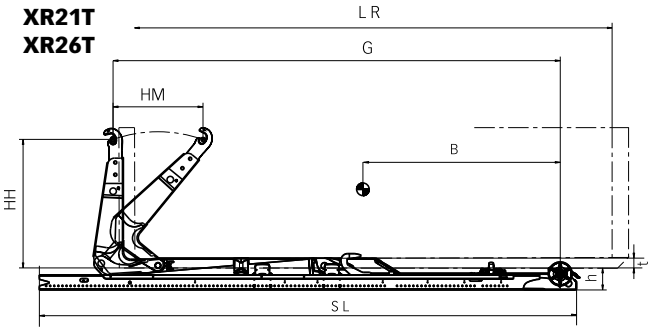

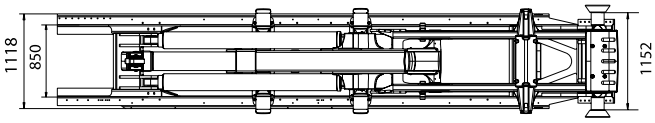

* Weight includes hydraulic body locking and excludes oil tank and oil.

** The subframe length (SL) can be reduced to achieve a final installation length. The minimum installation length depends upon country and control valve position. For an exact installation length dimension please contact your local Hiab Multilift dealer.

Hiab Multilift equipments meet the demands set forth in the EU Machine Directive and they are CE marked.

We reserve the rights for modifications. Illustrations do not always show an equipment in standard version.

PRIMARY DIMENSIONS

MODEL	XR21S.51	XR21S.55	XR21T.51	XR21T.55	XR26S.55	XR26T.55
LR = BODY LENGTH (m) min - max	4,2 - 6,2	4,7 - 6,5	4,3 - 6,2	4,7 - 6,6	4,5 - 6,6	4,7 - 6,5
SL = SUBFRAME LENGTH (mm) **	5933	6283	5933	6283	6583	6583
B = CENTRE OF GRAVITY (mm)	2700	3050	2900	3200	3050	3250
G = EXACT G-LENGTH (mm)	5080	5480	5080	5480	5480	5480
HM = HORIZONTAL MOVEMENT (mm)	1100	1000	1100	1100	1000	1100
h = INSTALLATION HEIGHT (mm)	250				270	
t = MIN. FREE TUNNEL HEIGHT (body) (mm)	125					
HH = HOOK HEIGHT (mm)	1575					

Cargotec improves the efficiency of cargo flows on land and at sea – wherever cargo is on the move. Cargotec's daughter brands Hiab, Kalmar and MacGregor are recognised leaders in cargo and load handling solutions around the world. Cargotec's global network is positioned close to customers and offers extensive services that ensure the continuous, reliable and sustainable performance of equipment. www.cargotec.com

CARGOTEC

Cargotec UK Limited
Ellesmere, Shropshire
SY12 9JW UK
Tel. 01691 623100
Fax 01691 623022
www.hiab.co.uk

BD-XRPWR-EN-UK_100506